EIGHT CHANNEL DIGITAL VIDEO SYSTEM WITH TWO BI-DIRECTIONAL MULTI-PROTOCOL DATA CHANNELS

985C SERIES
MULTIMODE

Features:

- Compatible with NTSC, (RS – 170A & RS –343A), PAL and SECAM
- Diagnostics: Video, DC Power, OLI, Data Activity
- Automatic Resettable Fuses on Power Lines
- Digital Video Transmission
- Multi-Protocol Data

Specifications:
Video:
I/0 Level .....1 Vp-p (±3 dB)
I/0 Impedance ..... 75 Ohms
Bandwidth .....7 MHz
Differential Gain .....<2 %
Differential Phase..... <0.7 °
SNR (Unified Weighted)..... >55 dB
Connector ..... BNC

Data:
Number of Channels…….2 (Full Duplex)
Interface……Selectable Multi-protocol
Choice of: RS485 (2 or 4 wire),
RS422,
RS232,
Manchester
Data Format .....Asynchronous, Serial
Data Rate .....DC to 115 Kbs (NRZ)
Connector .....5 Pin Screw Terminal

Optical
Wavelength .....1310/1550 nm
Loss Budget (62/125µ).....12 dB
Maximum Distance .....1 Km
(Limited by Fiber Dispersion)
Connector ..... ST

Environmental
Operating Temp……..-40°C to +75°C
Storage Temp……-40°C to +85°C
Humidity…….0% to 95% (non condensing)
MTBF……>100,000 hours

Power Supply:
Module : 12 VDC
(AFI Part#: PS-12D)

Size:
Module-…… $8^{1/8}$" x $4^{1/8}$" x $1^{5/8}$ "

Ordering information:
MT= Video/Data Transmitter / Data Receiver
MR= Video/Data Receiver / Data Transmitter
Example:
MT-985C to MR-985C

10/01/2014 JPK

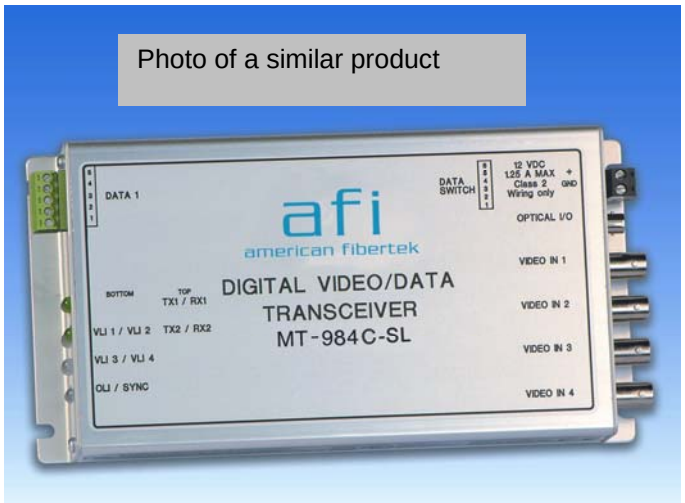

The American Fibertek 985C Series transmits 8 channels of high-quality digitized video and two channels of user selectable multi-protocol data on one multimode optical fiber using WDM technology. The available data channels are RS485 (2 or 4 wire), RS422, RS232 and Manchester. Data rates up to 115 kbs are supported.

Designed to be completely transparent to all camera and monitor manufacturers, this system requires no field adjustments at installation or additional maintenance thereafter. Diagnostic indicators provide a quick visual indication of system status.

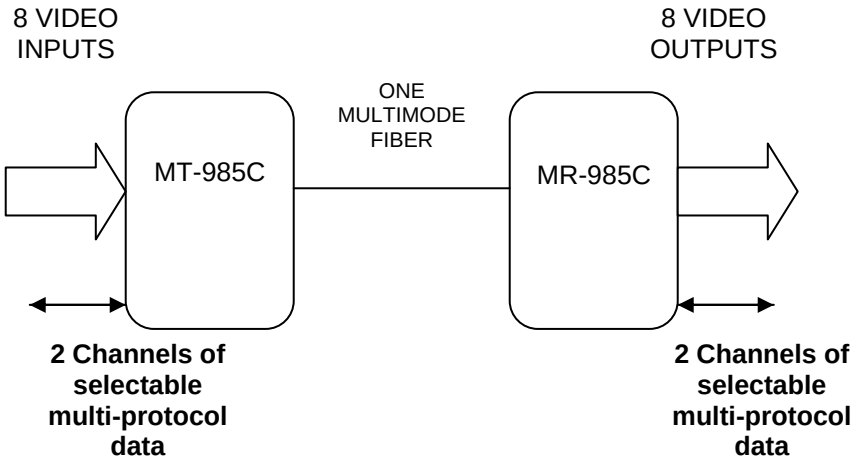

american fibertek inc. 120 Belmont Drive, Somerset, NJ, USA 08873-1204
Phone: 732.302.0660 FAX: 732.302.0667 Toll Free: 877.234.7200 Email: mail@americanfibertek.com