Series OS Optical Switch

Optical "Dual 2x2 Bypass" Switch

(Preliminary)

Photo of another product in a similar package

FEATURES:

- Fail Safe Non-Latching
- High Reliability
- Switch Mode Indicators
- Small Profile

SPECIFICATIONS:

Optical:

Wavelength…1270-1350 or 1510-1610 nm
Switching Time……..10 ms
Insertion Loss……..…1.0 dB
Crosstalk……..…-50 dB
Polarization Dependent Loss……...0.1 dB
Repeatability……...+/- 0.05 dB
Optical Return Loss……..……...50 dB
Input Optical Power……..500 mW
Life Cycles……..……10 Million
Switch Type……..…..Non-Latching
Bypass Activation
-Loss of DC Power
-Contact Input (DC Power Present)
Connectors……LC

DC Power:

Input Voltage……...12Vdc
Input Current……..100mA

Temperature:

Operating
-0°C to +65°C, non-condensing
Storage
-40°C to +85°C

Size:

Module : 4¼" x 4¼" x $1^1/_8$"

Ordering information:

Multi-mode:
MOS-2-2X2-13
Dual 2X2 Bypass, 1310nm, Module

MOS-2-2X2-15
Dual 2X2 Bypass, 1550nm, Module

Singlemode:
MOS-2-2X2-13-SL
Dual 2X2 Bypass, 1310nm, Module

MOS-2-2X2-15-SL
Dual 2X2 Bypass, 1550nm, Module

The American Fibertek Series OS optical bypass switch is designed especially for protection and restoration operations.

The OS Series Dual 2x2 Bypass opto-mechanical fiberoptic switch provides 2 simultaneously activated 2 x 2 Bypass switches in a single compact package. The device connects optical channels by redirecting incoming optical signals into selected output fibers
This is achieved using an opto–mechanical configuration which is activated via an electrical control signal. The switch is bidirectional.

The optical bypass mode is triggered on when the optical switch loses DC power. Alternatively, the bypass mode may be activated from a contact input when DC power is present.

These optical switches are available in single mode and multi-mode and at either 1310nm or 1550nm wavelengths.

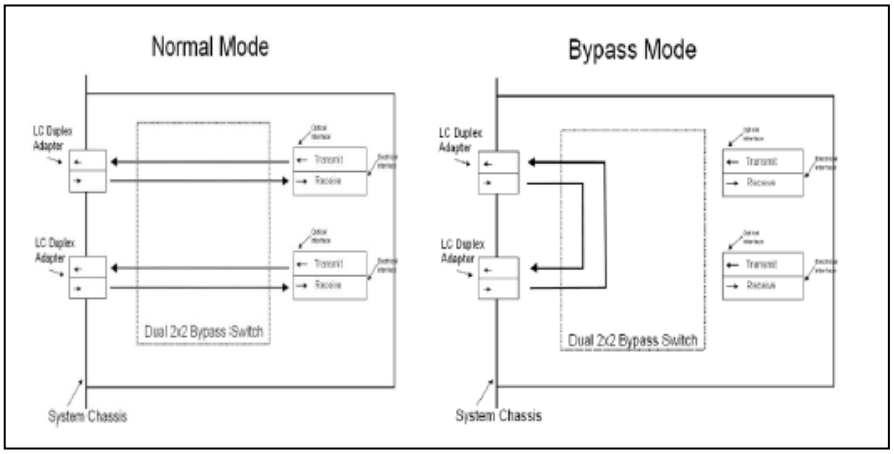

11/06/2015 JPK

american fibertek inc. 120 Belmont Drive, Somerset, NJ, USA 08873-1204
Phone: 732.302.0660 FAX: 732.302.0667 Toll Free: 877.234.7200 Email: mail@americanfibertek.com