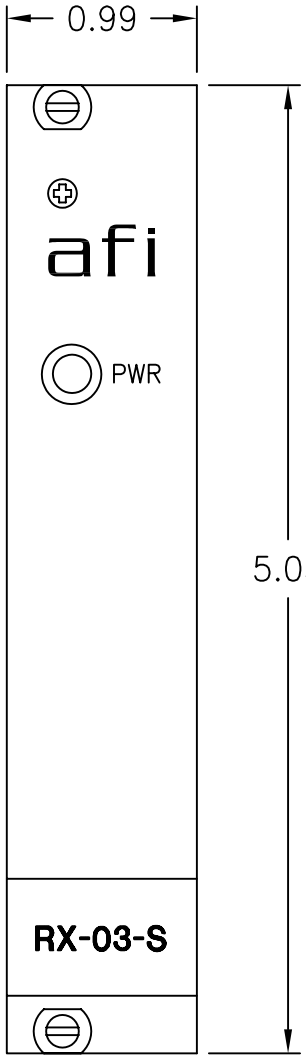

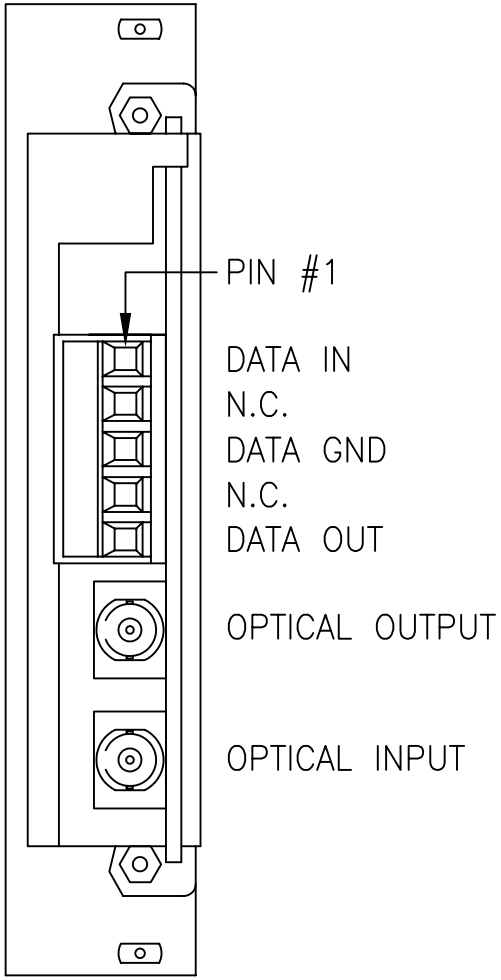

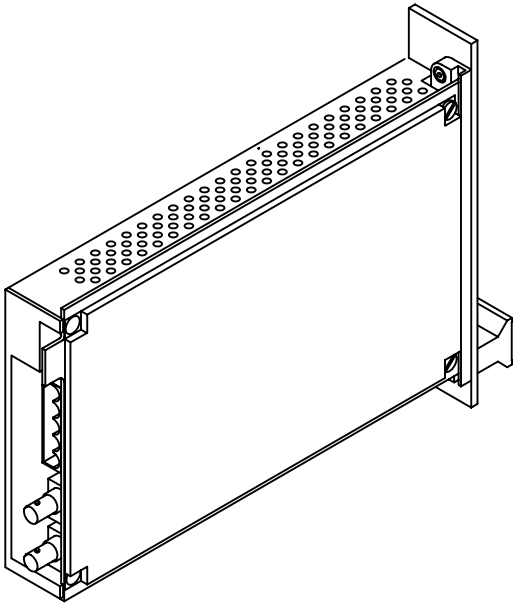

afi american fibertek 120 BELMONT DRIVE SOMERSET N.J.	DATE: 07 JULY 09		RX–03–S CUSTOMER ASSEMBLY DRAWING			
	ACAD FN.: RX–03–S CC					
	SCALE: NONE	DWG BY: BLB	DWG. NO.:	SH. 1 OF 1	REV.:	CHK.: SK