120 Belmont Drive
Somerset, NJ 08873-1204

American Fibertek

Phone: 732.302.0660 Fax: 732.302.0667

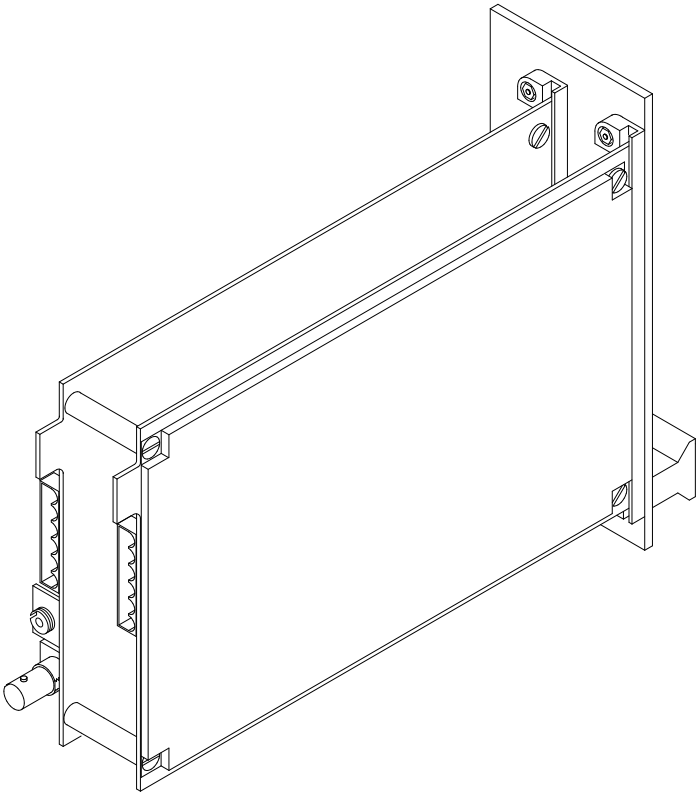

Instruction Manual

RR-1490E
Video Receiver With
Bi-directional RS422 And
Bi-directional Contact Closure

© Copyright 2009, American Fibertek, Inc. 0111JD

CAUTION

RISK OF ELECTRIC SHOCK,
DO NOT OPEN WITH
POWER APPLIED

WARNING: TO PREVENT FIRE OR SHOCK HAZARD,
DO NOT EXPOSE THIS UNIT TO RAIN OR MOISTURE

NO USER SERVICEABLE PARTS INSIDE
REFER SERVICE TO QUALIFIED SERVICE PERSONNEL

INSTALLATION AND OPERATION INSTRUCTIONS

INTRODUCTION

Thank you for purchasing your American Fibertek RR-1490E multimode video receiver with bi-directional RS422 and bi-directional contact closure. Please take a few minutes to read these installation instructions in order to obtain the maximum performance from this product.

FUNCTIONAL DESCRIPTION

The RR-1490E operates as half of a transmitter / receiver pair for the transmission of a baseband NTSC, PAL, RS170, or RS343 video signal with bi-directional RS422 data and bi-directional contact closure. It is designed to operate with the MT-1490E or RT-1490E video transmitter over one multimode fiber optic cable.

The RR-1490E converts a RS422 data input and a contact closure input into an optical output using a 1550 nm wavelength source. The RR-1490E also converts an optical input signal returning on the same fiber into a single video output, a RS422 data output, and a 4-wire audio output using a 1310 nm wavelength detector. The 1490E Series product is designed to operate over an optical loss budget range of 0 to 18 dB. The RR-1490E operates on 50 or 62.5u multimode fiber. Refer to the data sheets for detailed performance specifications.

This unit is designed for rack mounting in any of the American Fibertek subracks available. The subrack models are SR-20/2, SR-20R/2, and SR-20D/2. Slide in rack mounting, detachable terminal blocks, and a LED indicator provide for easy installation and monitoring of video, data, audio, and optical power.

The RR-1490E is designed for rack mounting only. For a modular stand alone version please see the MR-1490E.

INSTALLATION

THIS INSTALLATION SHOULD BE MADE BY A QUALIFIED SERVICE PERSON AND SHOULD CONFORM TO THE NATIONAL ELECTRICAL CODE, ANSI/NFPA 70 AND LOCAL CODES.

The unit slides into any two adjacent slots in the SR-20, SR-20R, or SR-20D subrack. Use a small screwdriver to push and lock the four ¼ turn fasteners into place.

POWER SOURCE

Power to the unit is supplied by the subrack. Please refer to the SR-20, SR-20R, SR20D and PSR-2 instructions for further details.

POWER CONNECTION

Power is supplied to the unit via a four finger backplane connector. The RR-1490E can be inserted into the subrack or removed from the subrack with power applied to the backplane.

FIBER CONNECTION

The fiber optic connection is made via an ST connector located on the back of the unit. Be sure to allow

sufficient room for the required minimum bend radius of the fiber cable used.

VIDEO OUTPUT CONNECTION

The video output connection is made via a BNC connector on the back of the unit. The 75Ω video output can be looped through typical baseband video inputs of switchers, recorders and other equipment as required. For proper operation, the output must be terminated with 75Ω. For optimum performance the video cables should be the shortest length of coax practical.

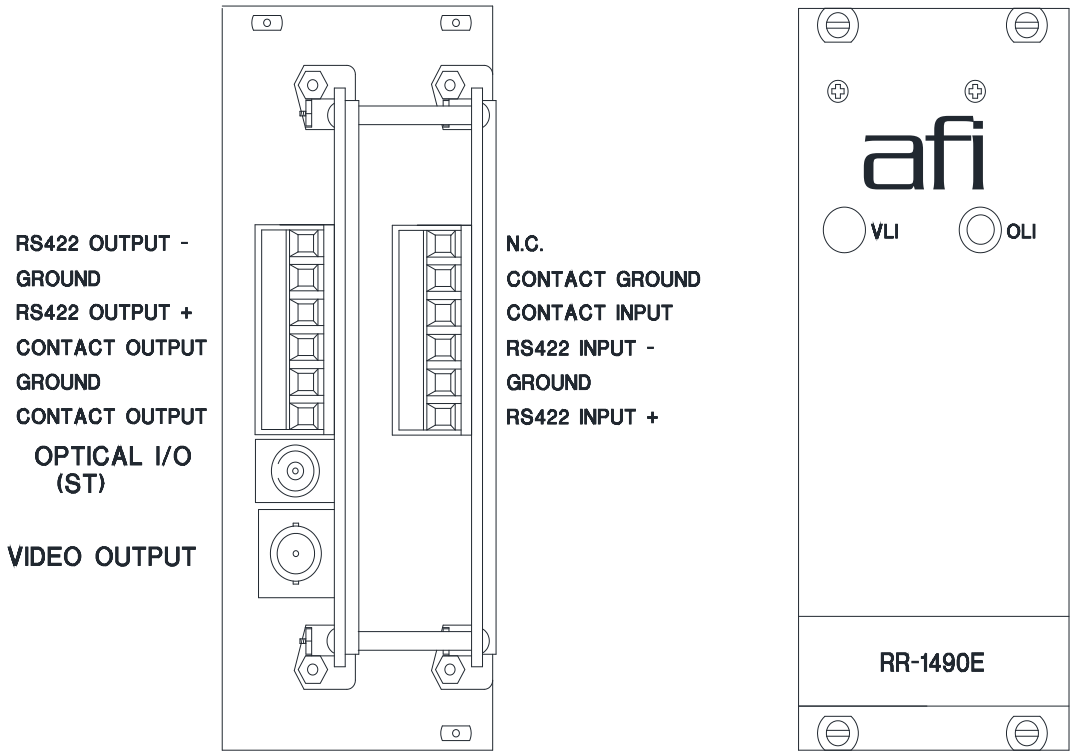

DATA INPUT / OUTPUT CONNECTIONS

Data input and output connections are made via a terminal block on the back of the unit. See the drawing above for proper orientation of input and output connections.

CONTACT CLOSURE INPUT / OUTPUT CONNECTIONS

Contact closure input and output connections are made via a terminal block on the right side of the unit. See label on unit for proper orientation of contact closure input and output connections. Please note ‘CONTACT CLOSURE IN’ on the RR-1490E becomes ‘CONTACT CLOSURE OUT’ on the MT-1490E or RT-1490E after going across the fiber. The reverse flow follows the same orientation. For optimum performance the contact closure cables should be the shortest length of wire practical.

RR-1490E STATUS INDICATOR

The RR-1490Eprovides the following LED status indicator to aid in installation and troubleshooting:

OLI

A bi-color LED indicator monitors the optical input power of the data/audio signal that is being received at the RR-1490E from the MT-1490E or the RT-1490E. Internal DC power and optical input status associated with this LED are summarized below.

Optical Level Indicator	DC Power Status	Optical Status
Green	On	Proper Optical Input Power Present
Red	On	Optical Input Not Detected
Off	Off	Check Power Supply

This unit complies with 21 CFR 1040.10 and 1040.11

LIFETIME WARRANTY INFORMATION

American Fibertek, Inc warrants that at the time of delivery the products delivered will be free of defects in materials and workmanship. Defective products will be repaired or replaced at the exclusive option of American Fibertek. A Return Material Authorization (RMA) number is required to send the products back in case of return. All returns must be shipped prepaid. This warranty is void if the products have been tampered with. This warranty shall be construed in accordance with New Jersey law and the courts of New Jersey shall have exclusive jurisdiction over this contract. **EXCEPT FOR THE FOREGOING WARRANTY, THERE IS NO WARRANTY OF MERCHANTABILITY OR FITNESS FOR A PARTICULAR PURPOSE OR OTHERWISE, EXPRESSED OR IMPLIED, WHICH EXTENDS BEYOND THE WARRANTY SET FORTH IN THIS AGREEMENT.** In any event, American Fibertek will not be responsible or liable for contingent, consequential, or incidental damages. No agreement or understanding, expressed or implied, except as set forth in this warranty, will be binding upon American Fibertek unless in writing, signed by a duly authorized officer of American Fibertek.

SERVICE INFORMATION

There are no user serviceable parts inside the unit.
In the event that service is required to this unit, please direct all inquiries to:

American Fibertek, Inc.
120 Belmont Drive
Somerset, NJ 08873

Phone: (877) 234-7200
Phone: (732) 302-0660
FAX (732) 302-0667

E-mail: techinfo@americanfibertek.com