American Fibertek
120 Belmont Drive
Somerset, NJ 08873-1204
Phone: 732.302.0660 Fax: 732.302.0667

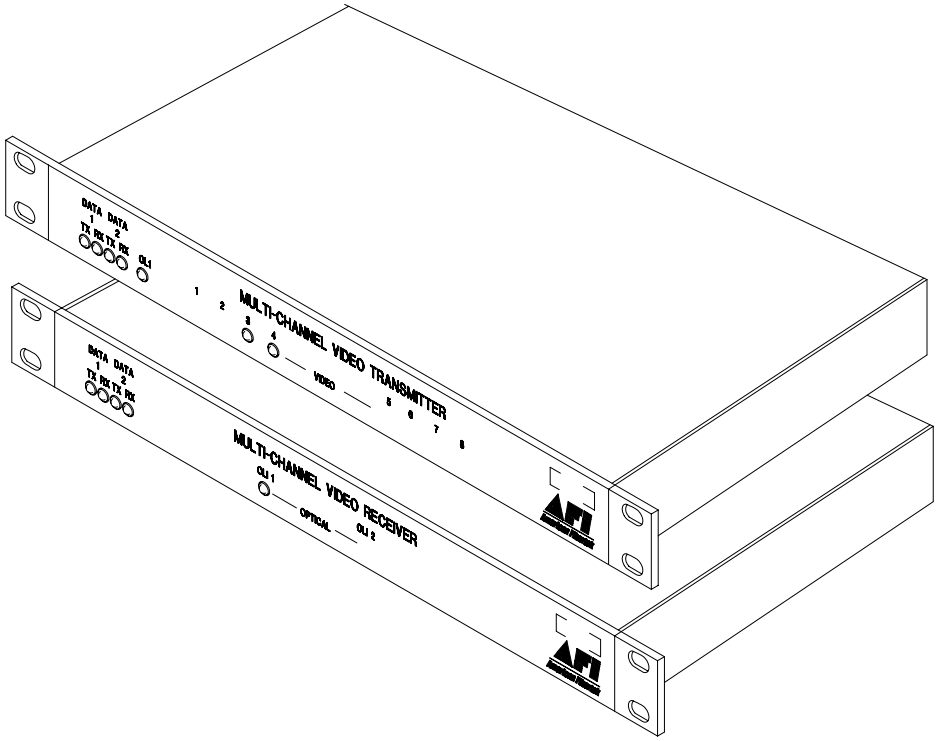

Instruction Manual

MTX-8229C
MRX-8229C
Two Channel Video Multiplexer with Return AD/Bosch Manchester Code and Bi-directional Contact Closure

© Copyright 2005, American Fibertek, Inc. 1228JD

CAUTION

RISK OF ELECTRIC SHOCK,
DO NOT OPEN WITH
POWER APPLIED

WARNING: TO PREVENT FIRE OR SHOCK HAZARD,
DO NOT EXPOSE THIS UNIT TO RAIN OR MOISTURE

NO USER SERVICEABLE PARTS INSIDE
REFER SERVICE TO QUALIFIED SERVICE PERSONNEL

Table of Contents

Functional Description 3

Installation 3

Power Source 4

Power Connection 4

Fiber Connection 4

Video Input / Output Connections 4

Data Configuration 4

Data Connections and Terminations 5

MTX-8229C Status LED Indicators 6

MRX-8229C Status LED Indicators 7

Warranty / Service Information 8

INSTALLATION AND OPERATION INSTRUCTIONS

INTRODUCTION

Thank you for purchasing your American Fibertek Series 8229C multimode two channel video multiplexer with return AD/Bosch Manchester control and bi-directional contact closure. Please take a few minutes to read these installation instructions in order to obtain the maximum performance from this product.

FUNCTIONAL DESCRIPTION

The 8229C Series units operate as a transmitter / receiver pair for the transmission of two simultaneous, real time baseband NTSC / PAL video signals with return Manchester control and contact closure over one multimode fiber optic cable.

The MTX-8229C transmitter accepts up to two video inputs and multiplexes these signals along with the data signals onto a single optical output port for connection to the fiber transmission system. Correspondingly, the MRX-8229C receiver converts the optical signal to two independent video output signals along with the data signals.

This link can accommodate both a return Manchester data interface and a bi-directional contact closure interface. These interfaces function independent of each other and can be used individually or concurrently.

The 8229C Series units operate on 50 um or 62.5 um multimode fiber. Refer to the data sheets for detailed performance specifications.

The individual units may be configured for rack mounting or wall mounting depending upon the position of the included mounting hardware.

INSTALLATION

THIS INSTALLATION SHOULD BE MADE BY A QUALIFIED SERVICE PERSON AND SHOULD CONFORM TO THE NATIONAL ELECTRICAL CODE, ANSI/NFPA 70 AND LOCAL CODES.

To install the MTX-8229C or MRX-8229C it is first necessary to mount the rack flanges to the unit.

For rack mounting the ears are installed on the sides of the unit with the surfaces that have oval holes flush with the front of the unit as in Figure 1. Mount the ears with the #10 flathead screws provided. To mount in the rack cabinet, use mounting screws that are appropriate for the rack cabinet being used.

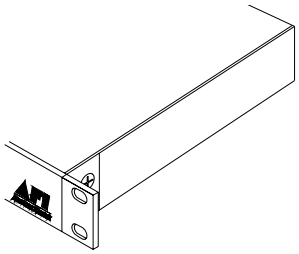

Figure 1. Rack Mount Configuration

For mounting the unit flush to a wall or other rigid surface, the ears may be installed on the sides with the oval holes flush with the bottom of the unit as in Figure 2. Mount the ears with the #10 flathead screws provided. Mount the unit to a rigid surface using #10 (5mm) screws.

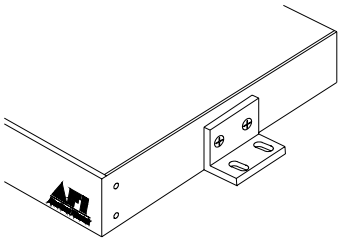

Figure 2. Wall Mount Configuration

POWER SOURCE

The internal power supply accepts universal line voltage. Any mains supply from 100 to 240 VAC, 50 to 60 Hz, may be used without modification or adjustment. A universal power connector is provided on the rear of the unit to facilitate connection to the power mains.

POWER CONNECTION

The unit is supplied (in the US and UK only) with a three conductor power cord. The “ground” conductor is directly connected to the chassis.

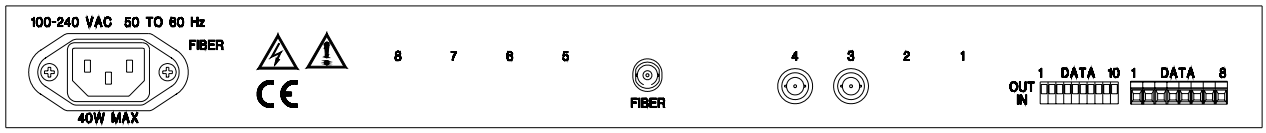

FIBER CONNECTION

The fiber optic connection is made via a ST connector located at the back of the unit. Be sure to allow sufficient room for the required minimum bend radius of the fiber cable used.

VIDEO INPUT / OUTPUT CONNECTIONS

Video input and output connections are located on the rear of the unit. A BNC connector is provided for each channel. Please note that video channels one, two, and five through eight are not used in this unit. The video inputs are connected to an appropriate 75Ω baseband video source such as a camera or a video recorder output. The 75Ω video outputs can be looped through typical baseband video inputs of switchers, recorders and other equipment as required. For proper operation, the outputs must be terminated with 75Ω. For optimum performance the video cables should be the shortest length of coax practical.

DATA CONFIGURATION

There is a rear panel data configuration switch bank preset at the factory for Manchester and RS232 data transmission. **These switches must remain in the positions shown below to properly transmit AD/Bosch Manchester data and contact closure.**

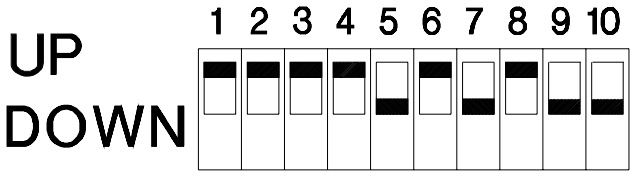

DATA INPUT / OUTPUT CONNECTIONS

Data input and output connections are located on the rear panel terminal block. A mating plug connector is provided. The figure below identifies the specific connections for the Manchester and RS232 data connections for the MTX-8229C.

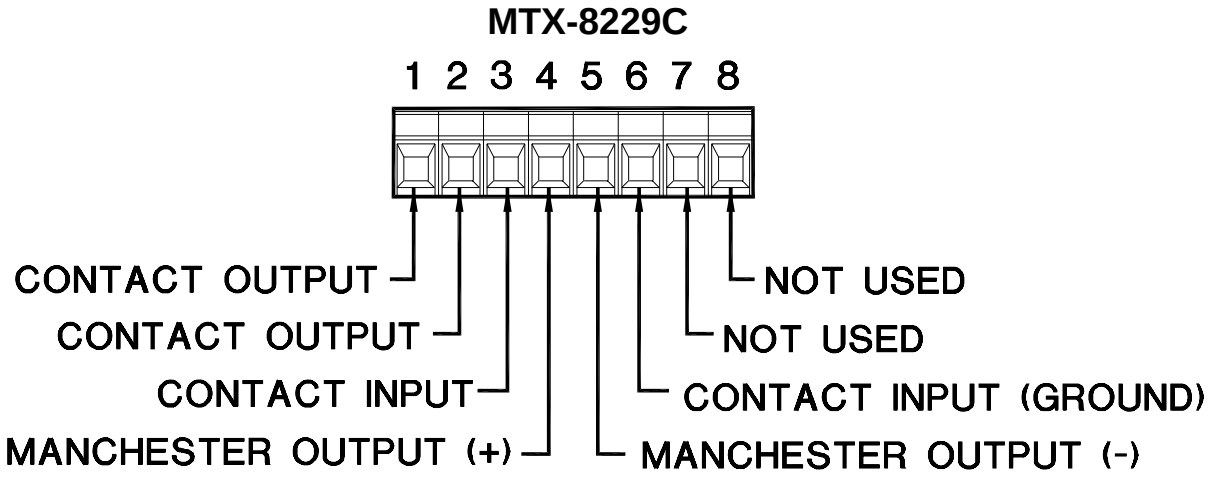

The figure below identifies the specific connections for the Manchester and RS232 data connections for the MRX-8229C.

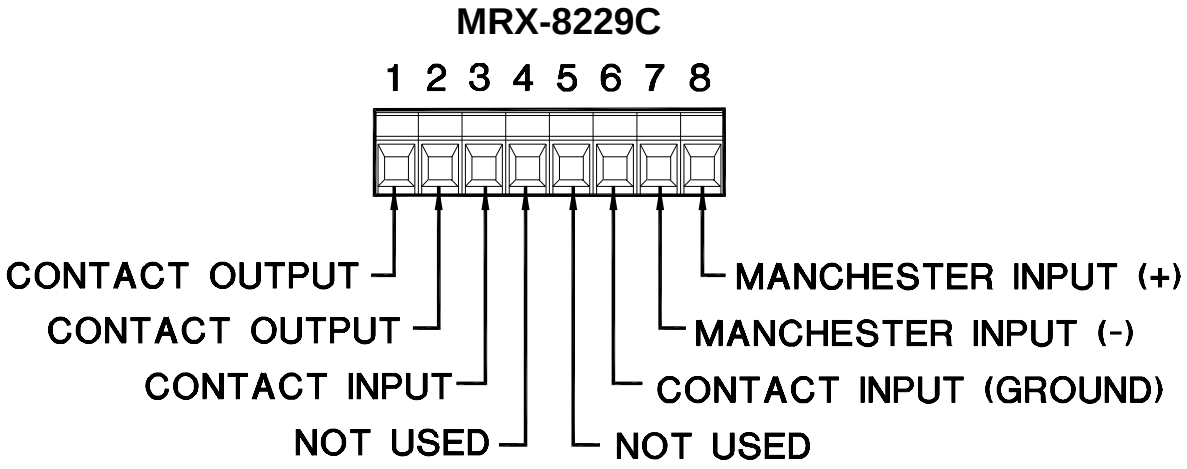

DATA TERMINATION REQUIREMENTS

Manchester Data Signals

The Manchester data input on the MRX-8229C is internally terminated with 120 ohms. It is recommended to provide a 120 ohm termination at the copper device which is terminating the MTX-8229C data output signal. If the MTX-8229C data output signal is daisy chained to more than one device, only the last device in the chain should be terminated.

MTX-8229C STATUS INDICATORS

The MTX-8229C transmitter provides the following front panel LED status indicators to aid in installation and troubleshooting:

DATA

These indicators turn green when any data activity is present. An active DATA 1 RX LED indicates Manchester data is present at the output terminals of the MTX-8229C. The intensity of this indicator will vary depending on the data pattern sent to the unit. When configured for contact closure, the DATA 2 TX and RX LEDs will be off to indicate contact open and on to indicate contact closed. The data activity associated with these front panel DATA LEDs are summarized below.

DATA 1 TX	DATA 1 RX	DATA 2 TX	DATA 2 RX
Not Used	Manchester Rx	Contact State	Contact State

OLI

A bi-color LED indicator monitors the optical input power of the data signal that is being received at the MTX-8229C from the MRX-8229C. AC power and optical input status associated with this LED are summarized below.

Optical Level Indicator	AC Power Status	Optical Status
Green	On	Proper Optical Input Power Present
Red	On	Optical Input Not Detected
Off	Off	Check Power Supply Input

VIDEO

A bi-color LED indicator is provided for each of the two video channel inputs. Please note that video channels one, two, and five through eight are not used in this unit. AC power and video status associated with each of these LEDs are summarized below.

Video Presence LED	AC Power Status	Video Status
Green	On	Proper Input Video Present
Red	On	Input Video Not Detected
Off	Off	Check Power Supply Input

MRX-8229C STATUS INDICATORS

The MRX-8229C receiver provides the following front panel LED status indicators to aid in installation and troubleshooting:

DATA

These indicators turn green when any data activity is present. An active DATA 1 TX LED indicates Manchester data is present at the input terminals of the MTX-8229C. The intensity of this indicator will vary depending on the data pattern sent to the unit. When configured for contact closure, the DATA 2 TX and RX LEDs will be off to indicate contact open and on to indicate contact closed. The data activity associated with these front panel DATA LEDs are summarized below.

DATA 1 TX	DATA 1 RX	DATA 2 TX	DATA 2 RX
Manchester Tx	Not Used	Contact State	Contact State

OLI 1

A bi-color LED indicator monitors the power of the optical input signal that is being received at the MRX-8229C from video channels three and four of the MTX-8229C. AC power and optical input status associated with this LED are summarized below. Please note that data is sent as a subcarrier on channel three's video signal.

Optical Level Indicator	AC Power Status	Optical Status
Green	On	Proper Optical Input Power Present
Red	On	Optical Input Not Detected
Off	Off	Check Power Supply Input

This unit complies with 21 CFR 1040.10 and 1040.11

LIFETIME WARRANTY INFORMATION

American Fibertek, Inc warrants that at the time of delivery the products delivered will be free of defects in materials and workmanship. Defective products will be repaired or replaced at the exclusive option of American Fibertek. A Return Material Authorization (RMA) number is required to send the products back in case of return. All returns must be shipped prepaid. This warranty is void if the products have been tampered with. This warranty shall be construed in accordance with New Jersey law and the courts of New Jersey shall have exclusive jurisdiction over this contract. **EXCEPT FOR THE FOREGOING WARRANTY, THERE IS NO WARRANTY OF MERCHANTABILITY OR FITNESS FOR A PARTICULAR PURPOSE OR OTHERWISE, EXPRESSED OR IMPLIED, WHICH EXTENDS BEYOND THE WARRANTY SET FORTH IN THIS AGREEMENT.** In any event, American Fibertek will not be responsible or liable for contingent, consequential, or incidental damages. No agreement or understanding, expressed or implied, except as set forth in this warranty, will be binding upon American Fibertek unless in writing, signed by a duly authorized officer of American Fibertek.

SERVICE INFORMATION

There are no user serviceable parts inside the unit.
In the event that service is required to this unit, please direct all inquiries to:

American Fibertek, Inc.
120 Belmont Drive
Somerset, NJ 08873

Phone: (877) 234-7200
Phone: (732) 302-0660
FAX (732) 302-0667

E-mail: techinfo@americanfibertek.com