American Fibertek
120 Belmont Drive
Somerset, NJ 08873-1204
Phone: 732.302.0660 Fax: 732.302.0667

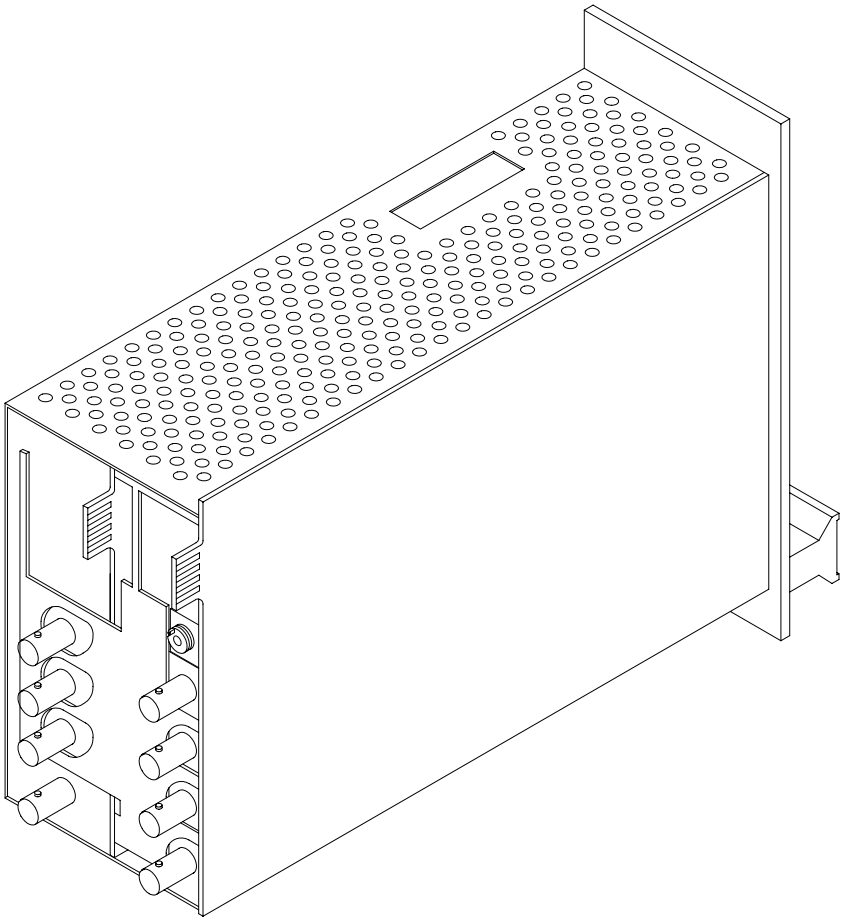

# Instruction Manual

## RT-980D-SL
## Eight Channel Video Transmitter
## With Diagnostic Interface

© Copyright 2006, American Fibertek, Inc. 1114JD

**CAUTION**

**RISK OF ELECTRIC SHOCK**
**DO NOT OPEN**

**CAUTION: TO REDUCE THE RISK OF ELECTRIC SHOCK:**

**DO NOT EXPOSE THIS PRODUCT TO RAIN OR MOISTURE**
**DO NOT REMOVE COVER OR BACK**
**NO USER-SERVICEABLE PARTS INSIDE**
**REFER SERVICING TO QUALIFIED SERVICE PERSONNEL**

# INSTALLATION AND OPERATION INSTRUCTIONS

## INTRODUCTION

Thank you for purchasing your American Fibertek RT-980D-SL singlemode eight channel video transmitter with diagnostic interface. Please take a few minutes to read these installation instructions in order to obtain the maximum performance from this product.

## FUNCTIONAL DESCRIPTION

The RT-980D-SL operates as half of a transmitter / receiver pair for the transmission of eight channels of high performance 10 bit digital NTSC, PAL, RS170, or RS343 video signals. The RT-980D-SL is designed to operate with the RR-980D-SL video receiver over one singlemode fiber optic cable. The 980D-SL Series product is designed to operate over an optical loss budget range of 0 to 15 dB. Refer to the data sheets for detailed performance specifications.

This unit is designed for rack mounting in the American Fibertek SR-20D/2 subrack. Slide in rack mounting, detachable terminal blocks, and LED indicators provide for easy installation and monitoring of video and optical power.

The RT-980D-SL has a built in capability to be remotely monitored through the AFINETY Remote Diagnostics System. A SR-20D/2 subrack and a RD-20D diagnostic card are required to facilitate this feature. Please refer to the SR-20D/2 and RD-20D Instruction Manuals for proper operation of this feature.

## INSTALLATION

THE INSTALLATION OF THIS UNIT SHOULD BE MADE BY A QUALIFIED SERVICE PERSON(S) AND MUST CONFORM TO ALL LOCAL CODES.

## POWER SOURCE

Power to the unit is supplied by the subrack. Please refer to the SR-20D and PSR-2 instructions for further details.

## POWER CONNECTION

Power is supplied to the unit via four finger backplane connectors. The RT-980D-SL can be inserted into the subrack or removed from the subrack with power applied to the backplane.

## FIBER CONNECTION

The fiber optic connection is made via a FC/PC connector located on the back of the unit. Be sure to allow sufficient room for the required minimum bend radius of the fiber cable used.

## VIDEO INPUT CONNECTIONS

The video input connections are made via BNC connectors on the right side of the unit. The video input should be connected to an appropriate 75Ω baseband video source such as a camera or a video recorder output. For optimum performance the video cables should be the shortest length of coax practical.

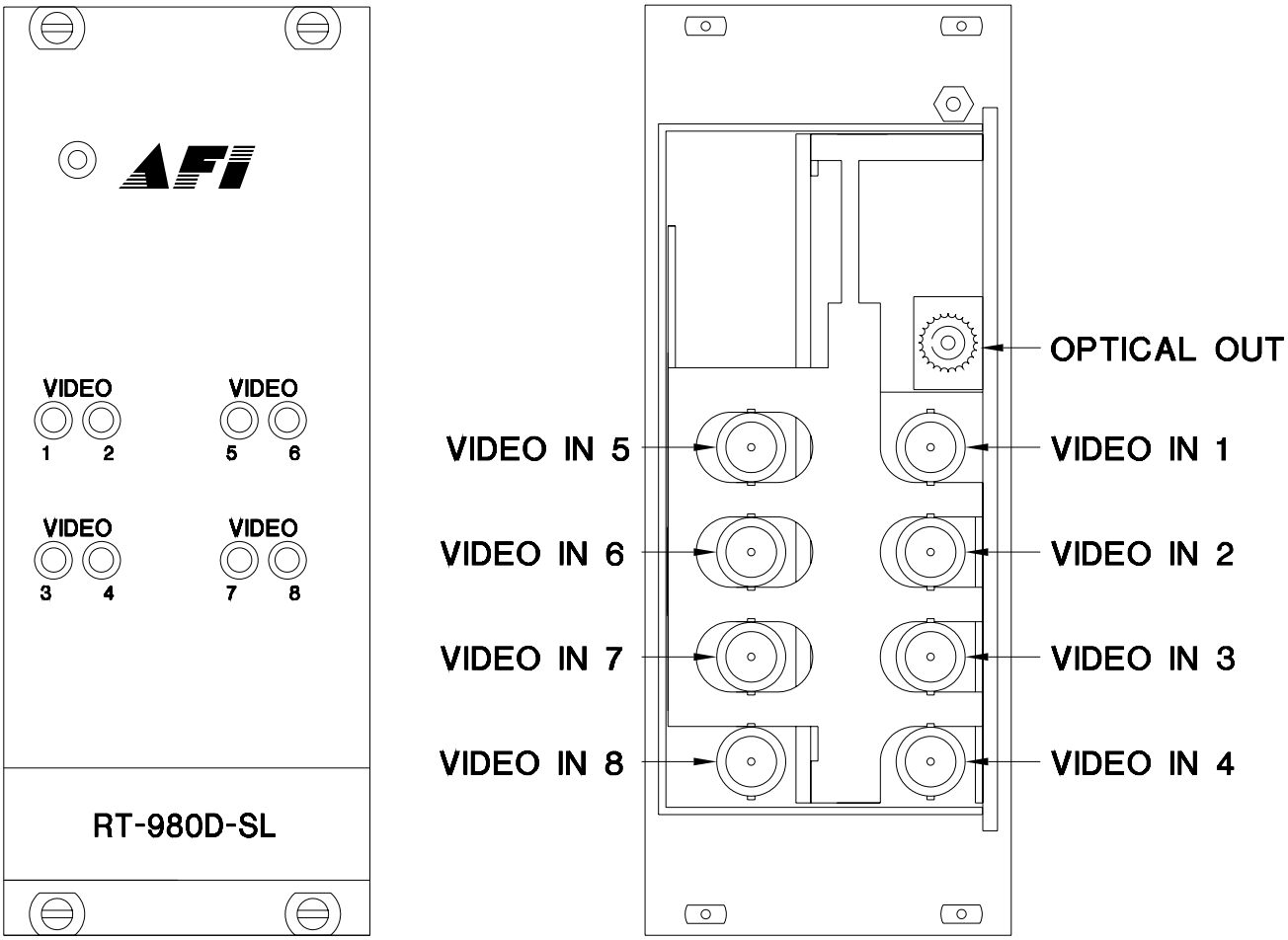


## RT-980D-SL STATUS INDICATORS

The RT-980D-SL transmitter provides the following LED status indicators to aid in installation and troubleshooting:

## VIDEO 1 THROUGH VIDEO 8

A bi-color LED indicator is provided for each of the eight video inputs to the RT-980D-SL. DC power and video status associated with each of these LED's are summarized below.

| Video Presence LED | DC Power Status | Video Status |
|---|---|---|
| Green | On | Proper Input Video Present |
| Red | On | Input Video Not Detected |
| Off | Off | Check Power Supply |

**This unit complies with 21 CFR 1040.10 and 1040.11**

## LIFETIME WARRANTY INFORMATION

American Fibertek, Inc warrants that at the time of delivery the products delivered will be free of defects in materials and workmanship. Defective products will be repaired or replaced at the exclusive option of American Fibertek. A Return Material Authorization (RMA) number is required to send the products back in case of return. All returns must be shipped prepaid. This warranty is void if the products have been tampered with. This warranty shall be construed in accordance with New Jersey law and the courts of New Jersey shall have exclusive jurisdiction over this contract. **EXCEPT FOR THE FOREGOING WARRANTY, THERE IS NO WARRANTY OF MERCHANTABILITY OR FITNESS FOR A PARTICULAR PURPOSE OR OTHERWISE, EXPRESSED OR IMPLIED, WHICH EXTENDS BEYOND THE WARRANTY SET FORTH IN THIS AGREEMENT.** In any event, American Fibertek will not be responsible or liable for contingent, consequential, or incidental damages. No agreement or understanding, expressed or implied, except as set forth in this warranty, will be binding upon American Fibertek unless in writing, signed by a duly authorized officer of American Fibertek.

## SERVICE INFORMATION

There are no user serviceable parts inside the unit.
In the event that service is required to this unit, please direct all inquiries to:

American Fibertek, Inc.
120 Belmont Drive
Somerset, NJ 08873

Phone: (877) 234-7200
Phone: (732) 302-0660
FAX (732) 302-0667

E-mail: techinfo@americanfibertek.com